Work Order ID 65551

January 19, 2011 1:39:32 PM

Item ID: D3065-3 **Accept** **Setup Start**

Revision ID: **Stop**

Item Name: Step Spacer

Start Date: 1/20/11 **Start Qty:** 40.00 **Cust Item ID:**

Required Date: 1/28/11 **Req'd Qty:** 40.00 **Customer:**

Reference:

Approvals: **Process Plan:** MF **Date:** 11-01-19 **Tooling:** _____ **Date:** _____ **Run Start**

QC: _____ **Date:** _____ **SPC (Y/N):** _____ **Date:** _____ **Stop**

Sequence ID/ Work Center ID	Operation Description	Set Up/ Run Hours	Tool ID	Tool #	Plan Code	Accept Qty	Reject Qty	Reject Number	Insp. Stamp
Draw Nbr	**Revision Nbr**								
D3065	Rev B								
100 Waterjet	FLOW WATER JET	0.00							
FLOW CNC Waterjet 2024.040	**Memo** 1-Cut as per Dwg D if necessary ☐Dwg Rev: B ☐Prog Rev: B ☐2-Deburr	0.00				B 11-1-25 (40)			
110 QC Quality Control	QC2- Inspect parts off machine FAI/FAIB	0.00							
	Memo	0.00				B 11-1-25			
120 QC Quality Control	QC8- Inspect parts - second check	0.00				counted			
	Memo	0.00 Sulo 1/26				(40)			

0

Dart Aerospace Ltd

W/O:		WORK ORDER CHANGES					
DATE	STEP	PROCEDURE CHANGE	By	Date	Qty	Approval Chief Eng / Prod Mgr	Approval QC Inspector

Part No: _____ **PAR #:** _____ **Fault Category:** _____ **NCR:** Yes No **DQA:** _____ **Date:** _____

Resolution: _____ **Disposition:** _____ **QA: N/C Closed:** _____ **Date:** _____

NCR:		WORK ORDER NON-CONFORMANCE (NCR)						
DATE	STEP	Description of NC Section A	Corrective Action Section B			Verification Section C	Approval Chief Eng	Approval QC Inspector
			Initial Chief Eng	Action Description Chief Eng	Sign & Date			

NOTE: Date & initial all entries

H:\fFORMS\Quality Assurance\approved QA\NCRWO RevE

Work Order ID 65551

January 19, 2011 1:39:33 PM

Item ID: D3065-3 **Accept** **Setup Start**

Revision ID:

Item Name: Step Spacer **Stop**

Start Date: 1/20/11 **Start Qty:** 40.00 **Cust Item ID:**

Required Date: 1/28/11 **Req'd Qty:** 40.00 **Customer:**

Reference:

Approvals: **Process Plan:** _____ **Date:** _____ **Tooling:** _____ **Date:** _____ **Run Start**

QC: _____ **Date:** _____ **SPC (Y/N):** _____ **Date:** _____ **Stop**

Sequence ID/ Work Center ID	Operation Description	Set Up/ Run Hours	Tool ID	Tool #	Plan Code	Accept Qty	Reject Qty	Reject Number	Insp. Stamp
130		0.00							
Small Fab	Small Fab								
Small Fab	**Memo**	0.00							
Small Fab	Deburr Stack		N/A						
140		0.00							
Brake NC	NC BRAKE		SB 11/02/01			40			
Brake NC	**Memo**	0.00							
Brake NC	Bend as per Dwg D3065								
150	QC5- Inspect part completeness to step on W/O	0.00	SB 11/02/01			counted 40			
QC	**Memo**	0.00							
Quality Control									

Dart Aerospace Ltd

W/O:		WORK ORDER CHANGES					
DATE	STEP	PROCEDURE CHANGE	By	Date	Qty	Approval Chief Eng / Prod Mgr	Approval QC Inspector

Part No: _____ **PAR #:** _____ **Fault Category:** _____ **NCR:** Yes No **DQA:** _____ **Date:** _____

Resolution: _____ **Disposition:** _____ **QA: N/C Closed:** _____ **Date:** _____

NCR:		WORK ORDER NON-CONFORMANCE (NCR)						
DATE	STEP	Description of NC Section A	Corrective Action Section B			Verification Section C	Approval Chief Eng	Approval QC Inspector
			Initial Chief Eng	Action Description Chief Eng	Sign & Date			

NOTE: Date & initial all entries

H:\fFORMS\Quality Assurance\approved QA\NCRWO RevE

Work Order ID 65551

January 19, 2011 1:39:33 PM

Item ID: D3065-3 **Accept** **Setup Start** **Stop**

Revision ID:

Item Name: Step Spacer

Start Date: 1/20/11 **Start Qty:** 40.00 **Cust Item ID:**

Required Date: 1/28/11 **Req'd Qty:** 40.00 **Customer:**

Reference:

Approvals: **Process Plan:** _____ **Date:** _____ **Tooling:** _____ **Date:** _____ **Run Start** **Stop**

QC: _____ **Date:** _____ **SPC (Y/N):** _____ **Date:** _____

Sequence ID/ Work Center ID	Operation Description	Set Up/ Run Hours	Tool ID	Tool #	Plan Code	Accept Qty	Reject Qty	Reject Number	Insp. Stamp
160	Chemical Conversion Coat per QSI005 4.1	0.00							
HandFinish	Memo	0.00	JH	11/02/01		40	0		
Hand Finishing									
170	QC3- Inspect Part Finish	0.00							
QC	Memo	0.00				40	BR	11-02-4.	
Quality Control									
180	Identify as per dwg & Stock Location Smal FAB	0.00							
Packaging	Memo	0.00				11/2/3	KDW	SP	
Packaging									

Dart Aerospace Ltd

W/O:		WORK ORDER CHANGES					
DATE	STEP	PROCEDURE CHANGE	By	Date	Qty	Approval Chief Eng / Prod Mgr	Approval QC Inspector

Part No: _____ **PAR #:** _____ **Fault Category:** _____ **NCR:** Yes No **DQA:** _____ **Date:** _____

Resolution: _____ **Disposition:** _____ **QA: N/C Closed:** _____ **Date:** _____

NCR:		WORK ORDER NON-CONFORMANCE (NCR)						
DATE	STEP	Description of NC Section A	Corrective Action Section B			Verification Section C	Approval Chief Eng	Approval QC Inspector
			Initial Chief Eng	Action Description Chief Eng	Sign & Date			

NOTE: Date & initial all entries

H:\fFORMS\Quality Assurance\approved QA\NCRWO RevE

Work Order ID 65551

January 19, 2011 1:39:34 PM

Item ID: D3065-3 **Accept** **Setup Start**

Revision ID: **Stop**

Item Name: Step Spacer

Start Date: 1/20/11 **Start Qty:** 40.00 **Cust Item ID:**

Required Date: 1/28/11 **Req'd Qty:** 40.00 **Customer:**

Reference:

Run Start

Approvals: **Process Plan:** _____ **Date:** _____ **Tooling:** _____ **Date:** _____

Stop

QC: _____ **Date:** _____ **SPC (Y/N):** _____ **Date:** _____

Sequence ID/ Work Center ID	Operation Description	Set Up/ Run Hours	Tool ID	Tool #	Plan Code	Accept Qty	Reject Qty	Reject Number	Insp. Stamp
190	QC21- Final Inspection - Work Order Release	0.00							
QC	Memo	0.00							
Quality Control									

11/02/07

CL11/02/04

Dart Aerospace Ltd

W/O:		WORK ORDER CHANGES					
DATE	STEP	PROCEDURE CHANGE	By	Date	Qty	Approval Chief Eng / Prod Mgr	Approval QC Inspector

Part No: _____ **PAR #:** _____ **Fault Category:** _____ **NCR:** Yes No **DQA:** _____ **Date:** _____

Resolution: _____ **Disposition:** _____ **QA: N/C Closed:** _____ **Date:** _____

NCR:		WORK ORDER NON-CONFORMANCE (NCR)						
DATE	STEP	Description of NC Section A	Corrective Action Section B			Verification Section C	Approval Chief Eng	Approval QC Inspector
			Initial Chief Eng	Action Description Chief Eng	Sign & Date			

NOTE: Date & initial all entries

H:\fFORMS\Quality Assurance\approved QA\NCRWO RevE

Picklist Print

January 19, 2011 1:39:32 PM

1

Work Order ID: 65551

Parent Item: D3065-3

Parent Item Name: Step Spacer

Start Date: 1/20/11 **Required Date:** 1/28/11

Start Qty: 40.00 **Required Qty:** 40.00

Comments: IPP: □C□02.11.01□Incorporated D3066-1 IPP□KJ/RF
IPP Rev:D Now on Water Jet 06-04-11 JLM□

Component Item ID/ Item Name	Replacement Item ID	Mfg/ Purch	Bin Item	Primary Location	Last Location	Route Seq ID	Unit of Measure	Qty on Hand	Qty per Kit	Total Qty	Qty Issued	Date Issued	Status
M2024T3S.040 2024-T3 .040 sheet		Purchased	No			100	sf	216.4595	0.2178	9.170526 1811-1-25			

Location		Loc Qty	Loc Code	
MAT		28.2		
	114415	28.2		114415 (40)
MAT22		188.2595		
	110305	21.93		
	111786	9.66		
	112291	28.25		
	112331	52		
	113162	76.4195		

Dart Aerospace Ltd

W/O:		WORK ORDER CHANGES					
DATE	STEP	PROCEDURE CHANGE	By	Date	Qty	Approval Chief Eng / Prod Mgr	Approval QC Inspector

Part No: _____ **PAR #:** _____ **Fault Category:** _____ **NCR:** Yes No **DQA:** _____ **Date:** _____

Resolution: _____ **Disposition:** _____ **QA: N/C Closed:** _____ **Date:** _____

NCR:		WORK ORDER NON-CONFORMANCE (NCR)						
DATE	STEP	Description of NC Section A	Corrective Action Section B			Verification Section C	Approval Chief Eng	Approval QC Inspector
			Initial Chief Eng	Action Description Chief Eng	Sign & Date			

NOTE: Date & initial all entries

H:\fFORMS\Quality Assurance\approved QA\NCRWO RevE

DART AEROSPACE LTD	Work Order:	65551
Description: Step Spacer	Part Number:	D3065-3
Inspection Dwg: D3065 **Rev:** B		Page 1 of 1

FIRST ARTICLE INSPECTION CHECKLIST

[X] First Article [ ] Prototype

Drawing Dimension	Tolerance	Actual Dimension	Accept	Reject	Method of Inspection	Comments
1.260	+/-0.010	1.259	✓		MB-02 Ver1	
3.260	+/-0.010	3.260	✓		"	
5.260	+/-0.010	5.263	✓		"	
6.520	+/-0.010	6.518	✓		"	
2.093	+/-0.010	2.091	✓		"	
3.936	+/-0.010	3.933	✓		"	
4.186	+/-0.010	4.190	✓		"	
Ø0.128	+0.005/-0.000	.133	✓		"	
Ø1.250	+0.005/-0.000	1.252	✓		"	
Pitch 1.204	+/-0.005	1.203	✓		"	
0.040	+/-0.010	.040	✓		"	

Measured by:	IB	Audited by:		Prototype Approval:	N/A
Date:	11-1-25	Date:	11/01/26	Date:	N/A

Rev	Date	Change	Revised by	Approved
A	04.02.25	New Issue	KJ/RF	
B	04.08.12	Removed dimension 1.204	KJ/JLM	
C	06.06.23	Dwg Rev. changed	KJ/JLM	
D	07.09.06	0.040 dimension added	KJ/JLM	

Dart Aerospace Ltd

W/O:		WORK ORDER CHANGES					
DATE	STEP	PROCEDURE CHANGE	By	Date	Qty	Approval Chief Eng / Prod Mgr	Approval QC Inspector

Part No: _____ **PAR #:** _____ **Fault Category:** _____ **NCR:** Yes No **DQA:** _____ **Date:** _____

Resolution: _____ **Disposition:** _____ **QA: N/C Closed:** _____ **Date:** _____

NCR:		WORK ORDER NON-CONFORMANCE (NCR)						
DATE	STEP	Description of NC Section A	Corrective Action Section B			Verification Section C	Approval Chief Eng	Approval QC Inspector
			Initial Chief Eng	Action Description Chief Eng	Sign & Date			

NOTE: Date & initial all entries

H:\fFORMS\Quality Assurance\approved QA\NCRWO RevE

DESIGN	DRAWN BY	DART AEROSPACE LTD HAWKESBURY, ONTARIO, CANADA	
CHECKED PH	APPROVED	DRAWING NO. D3065	REV. B SHEET 3 OF 5
DATE 06.05.23		TITLE STEP LEG ASSEMBLY	SCALE 1:1

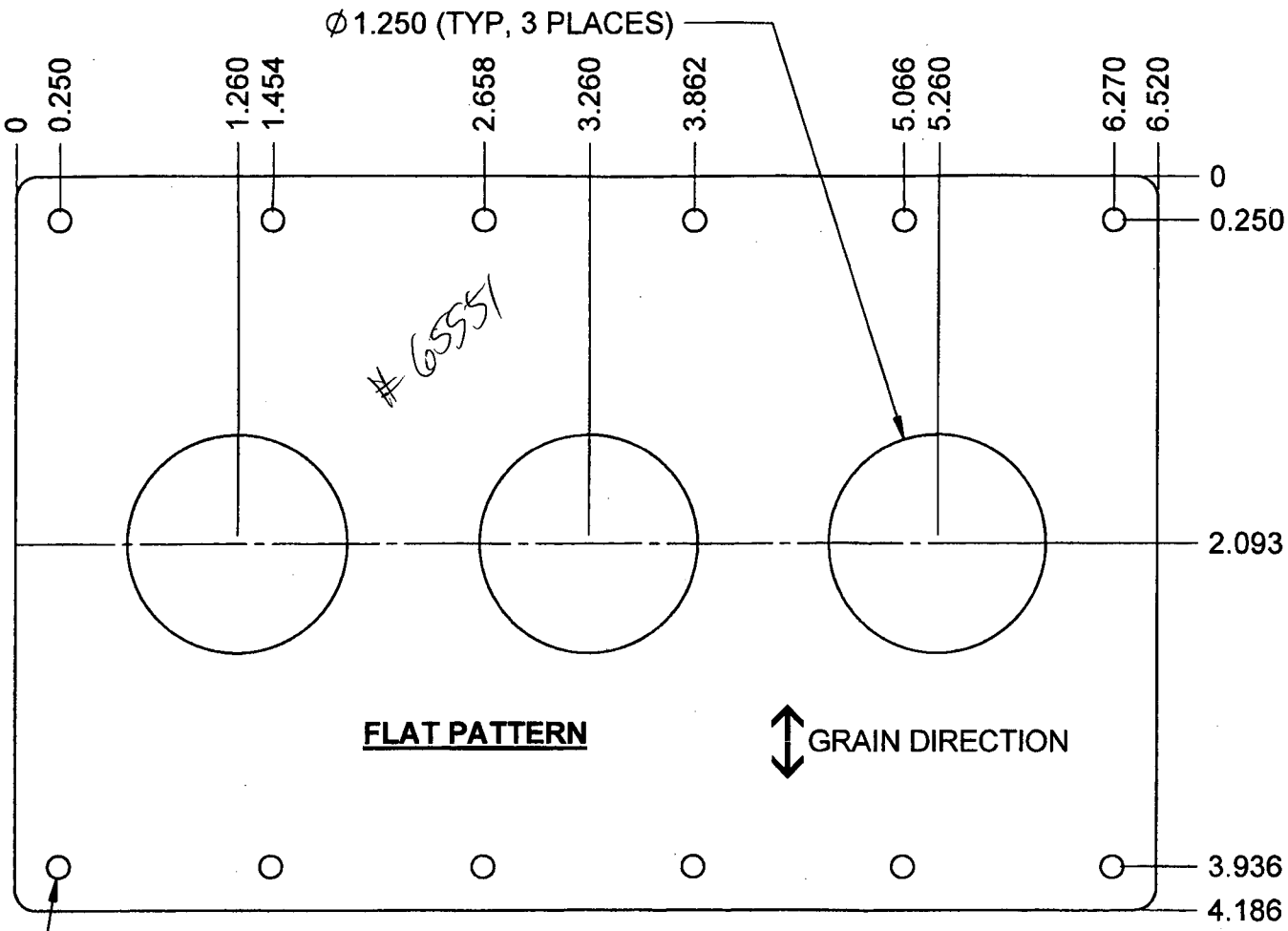

RELEASED
06 06 20

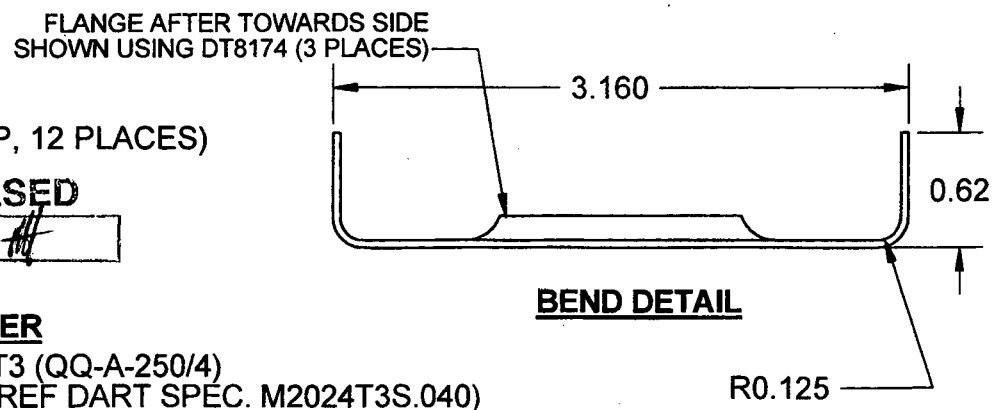

BEND DETAIL

D3065-3 STEP SPACER

1) MATERIAL: 2024-T3 (QQ-A-250/4)
   0.040 THICK (REF DART SPEC. M2024T3S.040)
2) FINISH: ACID ETCH & ALODINE PER DART QSI 005 4.1
3) PART IS SYMMETRIC ABOUT CENTERLINE
4) BREAK ALL SHARP EDGES 0.005 TO 0.010
5) TOLERANCES ARE PER DART QSI 018 UNLESS OTHERWISE NOTED
6) ALL DIMENSIONS ARE IN INCHES

COPYRIGHT © 2002 BY DART AEROSPACE LTD.

THIS DOCUMENT IS PRIVATE AND CONFIDENTIAL AND IS SUPPLIED ON THE EXPRESS CONDITION THAT IT IS NOT TO BE USED FOR ANY PURPOSE OR COPIED OR COMMUNICATED TO ANY OTHER PERSON WITHOUT WRITTEN PERMISSION FROM DART AEROSPACE LTD.

Dart Aerospace Ltd

W/O:		WORK ORDER CHANGES					
DATE	STEP	PROCEDURE CHANGE	By	Date	Qty	Approval Chief Eng / Prod Mgr	Approval QC Inspector

Part No: _____ **PAR #:** _____ **Fault Category:** _____ **NCR:** Yes No **DQA:** _____ **Date:** _____

Resolution: _____ **Disposition:** _____ **QA: N/C Closed:** _____ **Date:** _____

NCR:		WORK ORDER NON-CONFORMANCE (NCR)						
DATE	STEP	Description of NC Section A	Corrective Action Section B			Verification Section C	Approval Chief Eng	Approval QC Inspector
			Initial Chief Eng	Action Description Chief Eng	Sign & Date			

NOTE: Date & initial all entries

H:\fFORMS\Quality Assurance\approved QA\NCRWO RevE